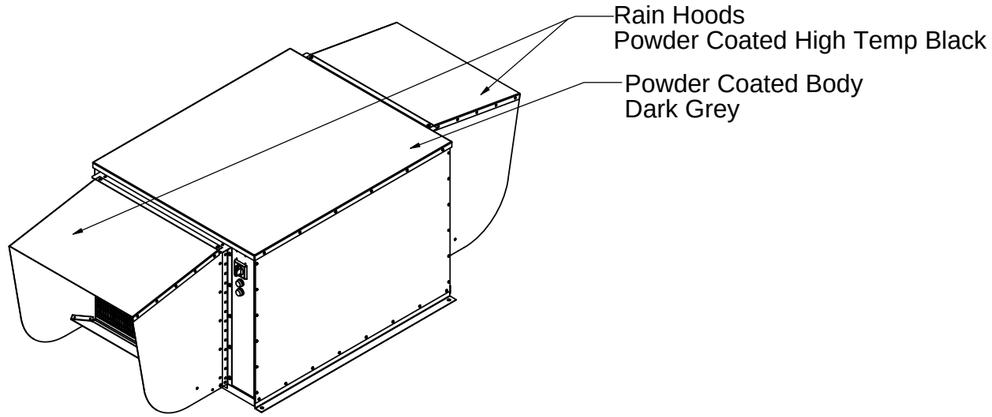

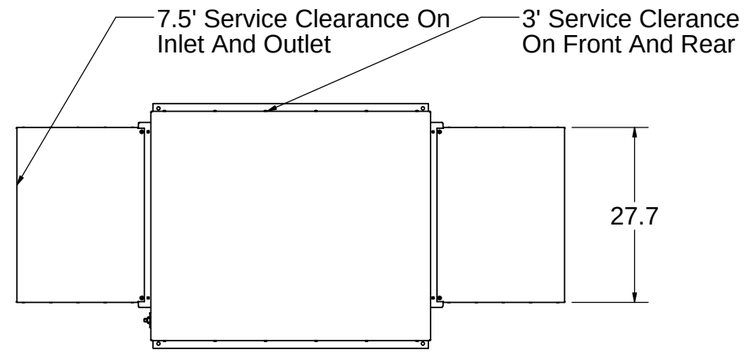

VIEW - TOP

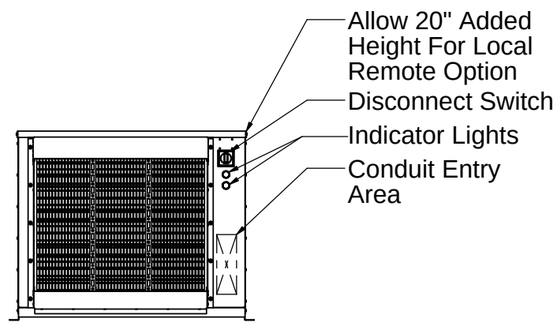

VIEW - LEFT
(INLET)

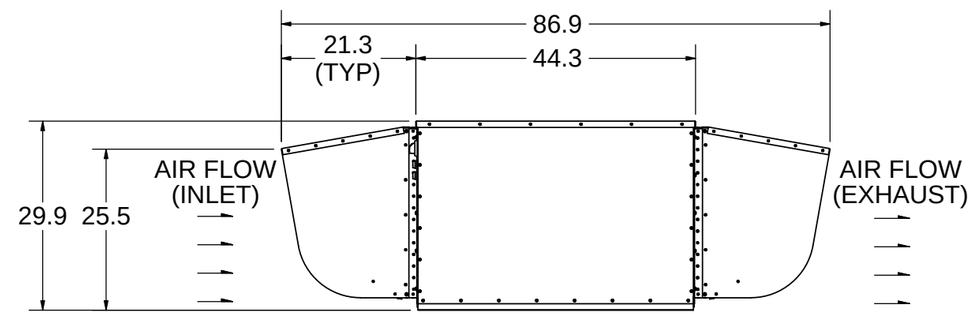

VIEW - FRONT

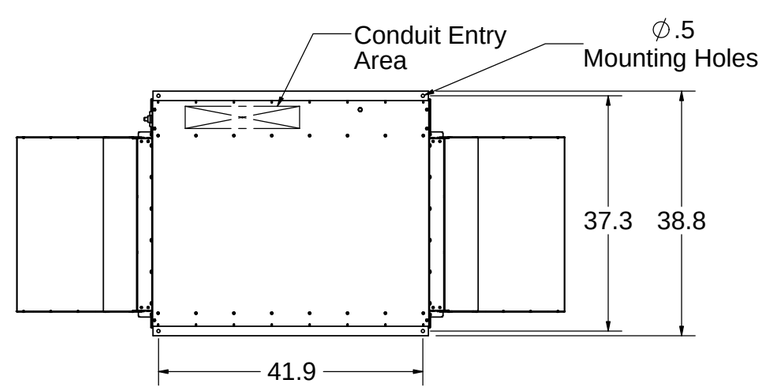

VIEW - BOTTOM

SIMPLEX

SIMPLEX, INC.
5300 RISING MOON ROAD
SPRINGFIELD, ILLINOIS 62711-6228

THE INFORMATION HEREON IS THE PROPERTY OF SIMPLEX, INC., AND/OR ITS SUBSIDIARIES. WITHOUT WRITTEN PERMISSION ANY COPYING, TRANSMITTAL TO OTHERS AND USE EXCEPT THAT FOR WHICH IT IS LOANED IS PROHIBITED.
2012 SIMPLEX, INC.©
ALL RIGHTS RESERVED

THIRD ANGLE PROJECTION

REVISIONS & UPDATES

REV	DATE	DESCRIPTION	INT	APPR

TOLERANCES
X.XXX ± 0.005"
X.XX ± 0.010"
X.X ± 0.020"
FRACTIONAL ± 1/32"
ANGLES ± 1°
SURFACES 125

APPROVED BY:	jwilcoxson
DRAWN BY:	pcannon
SCALE:	1:24
SHEET SIZE:	B-SIZE
SHEET TITLE:	Sheet 1
W.O. #:	
WEIGHT:	463.35 lbs

PROJECT
Polaris 100 & 150 Body

PART DESCRIPTION
Polaris Remote

PART NUMBER
ASM-00000051

PART REVISION:

DRAWING NUMBER
DWG-00000628

SHEET NUMBER	REVISION
1 / 1	A